DATASHEET
rev. 01 - 20/02/2025

Tecnosystemi group

MADE IN ITALY

REQ

Square rosette for flexible hose Ø 60/80 mm

- cod. SCD100572 - cod. SCD100573 - cod. SCD100574
- cod. SCD100578 - cod. SCD100579 - cod. SCD100580

DESCRIPTION

Wall-mounted terminal with new square flange, for 60 or 80 mm flexible hose

EXPLODED VIEW

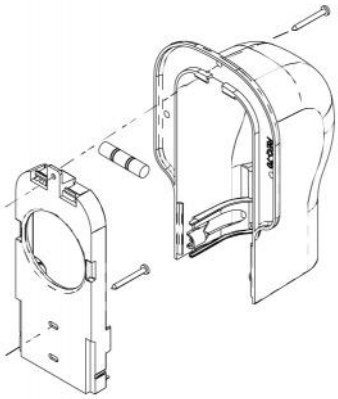

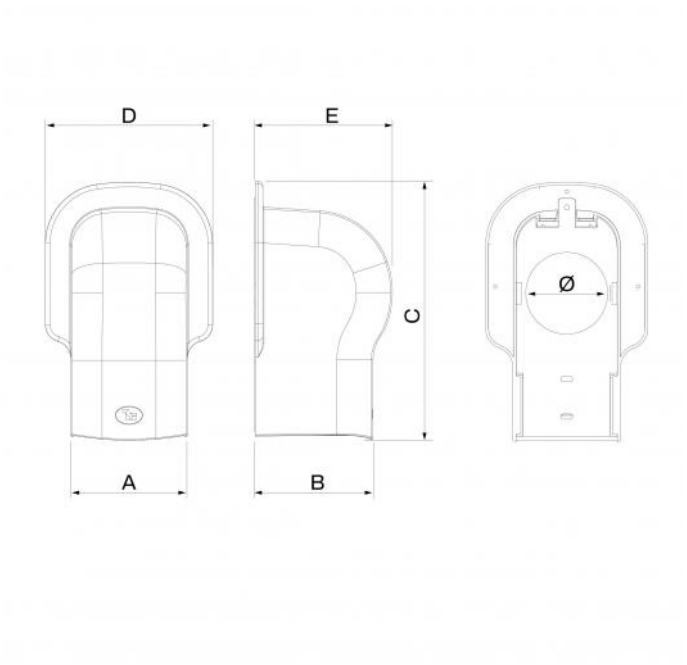

DIMENSIONS

CODE	MODEL	A [mm]	B [mm]	C [mm]	D [mm]	E [mm]	Ø [mm]
SCD100572	REQ 60 WHITE	78		190	118	95	60
SCD100573	REQ 60 BLACK	78		190	118	95	60
SCD100574	REQ 60 GREY	78		190	118	95	60
SCD100578	REQ 80 WHITE	102	100	222	146	116	80
SCD100579	REQ 80 BLACK	102	100	222	146	116	80
SCD100580	REQ 80 GREY	102	100	222	146	116	80

ITEMS

CODE	DESCRIPTION
SCD100572	REQ - SQUARE ROSETTE FOR FLEXIBLE PIPE 70 TO PROTECT PIPE - INNER ? 60 mm - WHITE
SCD100573	REQ - SQUARE ROSETTE FOR FLEXIBLE PIPE 70 TO PROTECT PIPE - INNER ? 60 mm - WHITE
SCD100574	REQ - SQUARE ROSETTE FOR FLEXIBLE PIPE 70 TO PROTECT PIPE - INNER ? 60 mm - WHITE
SCD100578	REQ - SQUARE ROSETTE FOR FLEXIBLE PIPE 100 TO PROTECT PIPE - INNER ? 80 mm - WHITE
SCD100579	REQ - SQUARE ROSETTE FOR FLEXIBLE PIPE 100 TO PROTECT PIPE - INNER ? 80 mm - WHITE
SCD100580	REQ - SQUARE ROSETTE FOR FLEXIBLE PIPE 100 TO PROTECT PIPE - INNER ? 80 mm - GREY

All rights relating to this publication are the exclusive property of Tecnosystemi SpA.
Tecnosystemi SpA reserves the right to make changes at any time and without notice, for technical or commercial needs.

Tecnosystemi S.p.A. - Società Benefit | www.tecnosystemi.com
Plant 1: Via dell'Industria, 2/4 - Plant 2: via Caduti del Lavoro, 7 - Plant 3: via Caduti del Lavoro, 5
Z.I. San Giacomo di Veglia 31029 Vittorio Veneto (Treviso) - Italy
Phone +39 0438 500 044 | Fax +39 0438 501 516 | **n. verde 800 904474 (only for Italy)**